Personas 90e

Automated Teller Machine
Site Preparation

B006-6334-C000
1204

NOTICE

This is a contractual document. It contains important warnings and confers important legal rights and obligations. You are advised to read it carefully.

It is the responsibility of the customer to assure that all installation preparations are complete and in compliance with NCR specifications and requirements and all applicable national, state, or local codes, regulations and laws.

The product described in this book is a licensed product of NCR Corporation.

APTRA™ and Personas™ are trademarks of NCR Corporation.

It is the policy of NCR Corporation (NCR) to improve products as new technology, components, software, and firmware become available. NCR, therefore, reserves the right to change specifications without prior notice.

All features, functions, and operations described herein may not be marketed by NCR in all parts of the world. In some instances, photographs are of equipment prototypes. Therefore, before using this document, consult with your NCR representative or NCR office for information that is applicable and current.

To maintain the quality of our publications, we need your comments on the accuracy, clarity, organization, and value of this book.

Address correspondence to:

NCR Financial Solutions Group Ltd.
Information Solutions
Kingsway West,
Dundee, Scotland
DD2 3XX

© 2003, 2004
By NCR Corporation
Dayton, Ohio U.S.A.
All Rights Reserved

Federal Communications Commission (FCC) Radio Frequency Interference Statement

Note: This equipment has been tested and found to comply with the limits for a Class A digital device, pursuant to Part 15 of the FCC Rules. These limits are designed to provide reasonable protection against harmful interference when the equipment is operated in a commercial environment. This equipment generates, uses, and can radiate radio frequency energy and, if not installed and used in accordance with the instruction manual, may cause harmful interference to radio communications. Operation of this equipment in a residential area is likely to cause harmful interference in which case the user will be required to correct the interference at his own expense.

Canadian Class A Device Declaration

This digital apparatus does not exceed the Class A limits for radio noise emissions from digital apparatus set out in the Radio Interference Regulations of the Canadian Department of Communications.

Le présent appareil numérique n'émet pas de bruits radioélectriques dépassant les limites applicables aux appareils numériques de la classe A prescrites dans le Réglement sur le brouillage radioélectrique édicté par le ministère des Communications du Canada.

Information to User

This equipment must be installed and used in strict accordance with the manufacturer's instructions. However, there is no guarantee that interference to radio communications will not occur in a particular commercial installation. If this equipment does cause interference, which can be determined by turning the equipment off and on, the user is encouraged to consult an NCR service representative immediately.

Caution

NCR Corporation is not responsible for any radio or television interference caused by unauthorised modifications of this equipment or the substitution or attachment of connecting cables and equipment other than those specified by NCR. Such unauthorized modifications, substitutions, or attachments may void the user's authority to operate the equipment. The correction of interference caused by such unauthorized modifications, substitutions, or attachments will be the responsibility of the user.

Revision Record

Date	Page	Description of Change
Jan. 2003	All	New publication for NCR Personas 90e
April 2004	chap 2	Rev B: Update to include text changes regarding bollards
December 2004	All	Rev C: Update to include Cash Acceptor, Cheque Acceptor, IMCRW, Private Audio

Contents

Preface xi
Overview xii
Customer Responsibilities xiii
Product Identification xiv

Chapter 1
Planning Check List and Installation Accessories

Planning Check List 1-1
Installation Accessories 1-2

Chapter 2
Physical Requirements

Packaging Dimensions 2-1
Terminal Dimensions 2-2
Island Dimensions 2-3
Existing Diebold Island 2-3
New Island 2-3
Installation and Service Clearances 2-5
Minimum Clearances 2-5
Recommended Clearances 2-6
Ambient Lighting 2-7
Security Bolts 2-8
ATM Location 2-8
Floor Loading 2-8
Access for All 2-9
Heights to Main Facia Items 2-9

Chapter 3
Electrical Requirements

Power Quality Distribution and Grounding Requirements 3-1
AC Power Requirements 3-1
Input Voltage Setting.....3-1
Power Cable 3-1
Grounding Requirements 3-2
Transient Power Loss 3-3
Electromagnetic Compatibility (EMC) and Safety 3-3
Communications Requirements.....3-4
High Order Communications Cables.....3-4
Remote Device Cables 3-5

Chapter 4
Installation Site Environmental Requirements

Environmental Requirements.....4-1
Temperature and Humidity 4-1
All Environments:.....4-1
Barometric Pressure.....4-1
Temperature Rise 4-1

Chapter 5
Decals

Decal Specifications.....5-1
Clear Windows.....5-1
Card Reader Decal (Orientation) 5-2
Advert Light 5-2

Appendix A
Transient Protection

AC Power Line Transient Protection A-1
Data Line Transient Protection A-3

Appendix B
Power Protection

NCR Power Protection and Cabling Products B-1
AC Power Line Transient Protection B-1
Data Line Transient Protection B-1
Uninterruptible Power Supplies..... B-2
Contact Information B-4

Index

Index Index-1

User Feedback Form

Preface

This book contains the information necessary for the preparation of a site conforming to NCR specifications. It is very important that the site complies with the requirements specified in this document because, once the equipment has been installed, deficiencies in site preparation or the problems caused by these deficiencies are much more difficult to detect and correct. Further, failure to comply with these requirements or to take proper steps to protect equipment against risks identified in this document may cause serious damage to the equipment and to the customer's business.

In addition to the need to comply with the requirements specified, electrical wiring and mechanical systems must also comply with all relevant codes, laws and regulations.

It is important that the site be prepared by a customer or his agent who is fully conversant with the special requirements of electronic equipment. The responsibility for ensuring that the site is prepared in compliance with this document remains with the customer.

For information and guidance only, a list is provided, in general terms, of those matters for which the customer is responsible. This list is not intended to be comprehensive, and in no way modifies, alters, or limits the responsibility of the customer for all aspects of adequate site preparation.

NCR staff will be available to answer questions relating to the contents of this document but, except where

- the customer has been notified that a full or partial consultancy service is available and / or that NCR will be willing to undertake a preliminary or final site survey and
- the customer shall have entered into a formal contract with NCR for provision of the same

No comment, suggestion or advice offered or not offered about preparation of the site nor any inspection of the site whether before or after preparation is to be taken as approval of the location of the site and equipment or of its preparation and NCR will not be liable in respect of any comment, suggestion or advice given by its staff or in respect of any failure to give advice.

No unauthorised NCR parts, or features should be added / fitted internally without prior approval from the NCR local customer sales representative.

Finally, only the customer can know the full extent of damage which may be caused to his business by reason of failure of the equipment

which is to be installed. For this reason it is the customer's responsibility to ascertain the extent of any such possible damage to his existing or planned business, and to effect full insurance in respect of it.

Overview

The NCR Personas 90e Automated Teller Machine (ATM) is a drive-up self-service ATM which may be installed in any suitable exterior location.

NCR's drive-up solution allows customers to deploy and deliver banking services in a true off-premise environment. ATMs located in off premise locations provide consumers with a convenient service. ATM deployers can leverage consumers' desire for convenience to generate sustainable profit, reduce operating costs or build their brand. Research carried out by NCR in the US revealed that consumers are at least 20 per cent more likely to use a machine they can access from their car, than one they have to approach on foot. People prefer to remain in their cars for a variety of reasons: they may have children with them; the weather; or they may be running late for a vital meeting. Whatever the reason, these ATMs enable virtually everyone to bank whenever they want, save time by avoiding the inconvenience of parking and stay out of the wind and rain.

NCR's freestanding Personas 90e drive-up solution is positioned as a completely flexible solution to meet all customers drive-up full function ATM needs. Providing value to customers by addressing their current needs to deliver drive-up services to consumers while allowing for a complete change in servicing philosophy for true off premise deployment. The freestanding Personas 90e solution allows customers to start with minimal functionality while allowing expansion for the addition of services to provide for deposits, full statements and alternative media, e.g. dispensing stamps.

The Personas 90e drive-up ATM is a full member of the Personas family offering real flexibility in a true sense of the word from functionality, deployment to servicing.

Customer Responsibilities

The customer must do or provide the following:

- When required by NCR, provide the NCR customer service representative with appropriate drawings that indicate:
  - Location of the equipment
  - Site wiring (power and signal, paths and lengths)
  - Location of other equipment capable of generating electrical noise, electromagnetic interference, heat, etc.
- Make building alterations necessary to meet wiring and other site requirements
- Provide and install all communications cables, special connectors and associated hardware
- Provide and install necessary power distribution boxes, conduits, grounds, lightning protection and associated hardware
- Make sure all applicable codes, regulations and laws (including but not limited to electrical, building, safety and health, disabilities) are met
- Provide and install auxiliary power or other equipment as required
- Provide storage or service areas as required
- Make sure the environmental requirements of the system / unit are met
- Provide floor coverings and environmental systems that limit or control static electricity build-up and discharge.

Product Identification

The product is identified by a class type number (5890), and a 4 digit model number which is printed on a label located in front of the power switch, inside the top cabinet. The first two digits of this model number identify the major model (normally 02), the next two digits identify the minor model (normally 01). The serial number is unique to each ATM. The tracer number is used to identify where the unit was built. Please quote all of the serial and tracer numbers including the prefix when making reference to the ATM.

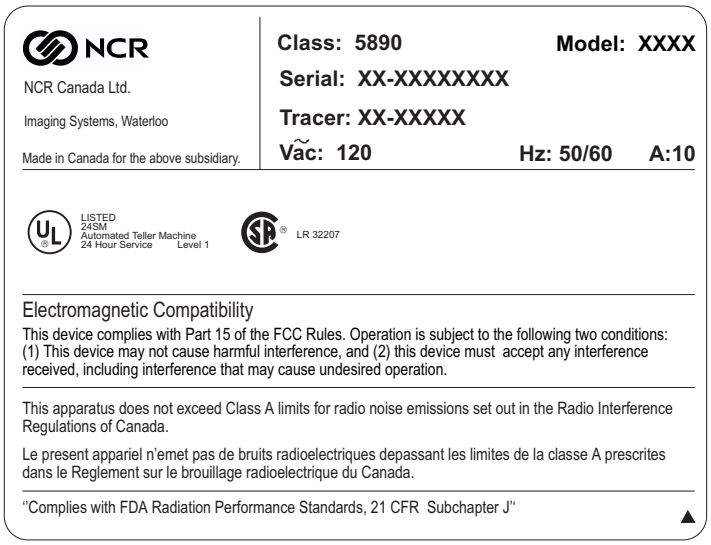
NCR

NCR Canada Ltd.

Imaging Systems, Waterloo

Made in Canada for the above subsidiary.

Class: 5890 Model: XXXX

Serial: XX-XXXXXXXX

Tracer: XX-XXXXX

Vac: 120 Hz: 50/60 A:10

LISTED 24SM Automated Teller Machine 24 Hour Service Level 1

LR 32207

Electromagnetic Compatibility

This device complies with Part 15 of the FCC Rules. Operation is subject to the following two conditions: (1) This device may not cause harmful interference, and (2) this device must accept any interference received, including interference that may cause undesired operation.

This apparatus does not exceed Class A limits for radio noise emissions set out in the Radio Interference Regulations of Canada.

Le present appariel n'emet pas de bruits radioelectriques depassant les limites de la classe A prescrites dans le Reglement sur le brouillage radioelectrique du Canada.

"Complies with FDA Radiation Performance Standards, 21 CFR Subchapter J"

Chapter 1

Planning Check List and Installation Accessories

Planning Check List 1-1

Installation Accessories 1-2

Planning Check List

To assist you in preparing your site for the arrival of your terminal, we provide here a check list of the various procedures that you should carry out **prior** to the arrival of your terminal. The procedures given are listed in chronological order, starting with the procedure that you should do first.

Activity	
Select site and make scaled plan	
Ensure correct environmental conditions	
Establish all contractor and vendor related schedules including island construction, cabling etc.	
Check communication line requirements	
Plan application development	
Check plan and make any alterations	
Build island for installation	
Prepare site for data communication	
Arrange for designing and printing of overlays/decals	
Order information products	
Order media supplies	
Plan operator training (optional)	
Ensure data communications equipment is installed and tested	
Ensure installation accessories listed are available	

Installation Accessories

When installing your terminal it is recommended that you have the following items available:

- Pincers / claw hammer to remove staples / nails from around the air / sea pallet
- **19 mm** (3 / 4 in.) ring / open-ended combination spanner and socket to remove pallet bolts, and to fit fixing bolts
- **17 mm** (11 / 16 in.) ring / open-ended combination spanner or socket
- Hex nut driver set (including M3 and M4 sizes)
- Selection of screwdrivers for flat blade and cross head applications
- Crane or forklift truck
- Scissors.

Chapter 2

Physical Requirements

Packaging Dimensions 2-1

Terminal Dimensions 2-2

Island Dimensions 2-3
- Existing Diebold Island 2-3
- New Island 2-3

Installation and Service Clearances 2-5
- Minimum Clearances 2-5
- Recommended Clearances 2-6
- Ambient Lighting 2-7
- Security Bolts 2-8
- ATM Location 2-8
- Floor Loading 2-8

Access for All 2-9
- Heights to Main Facia Items 2-9

Packaging Dimensions

The following illustration gives the dimensions of the ATM shipping carton.

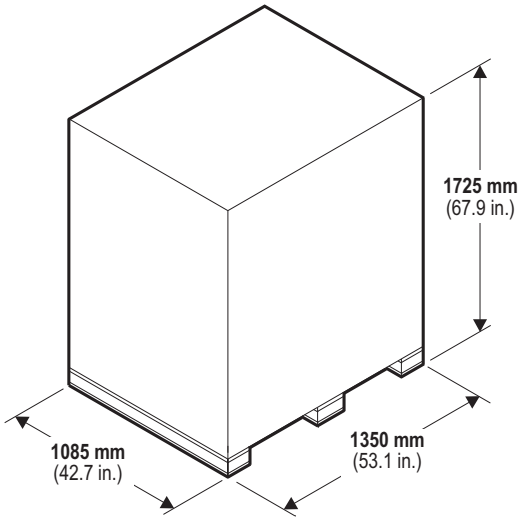

Terminal Dimensions

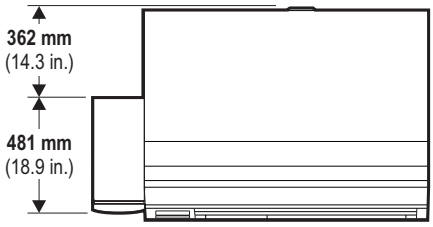

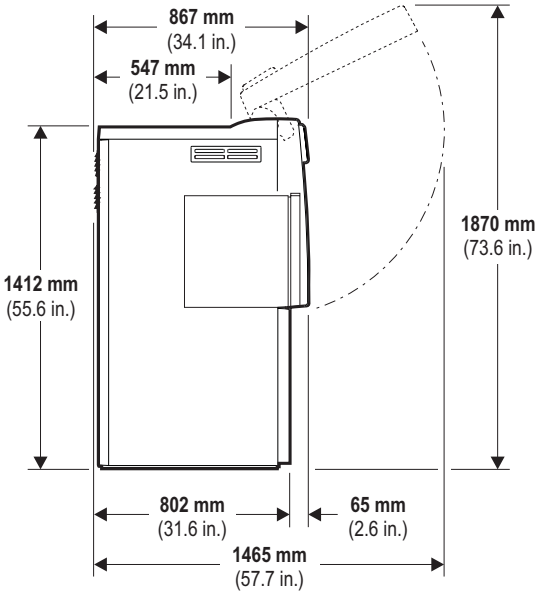

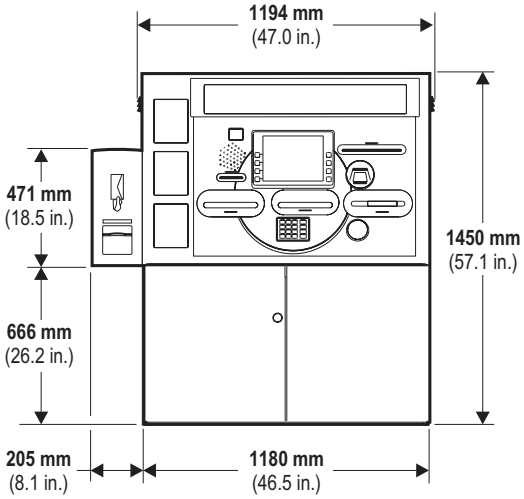

Note: The illustrations show the envelope dispenser on the left hand side, however it can be fitted to either side of the ATM.

Island Dimensions

The Personas 90e is intended for installation on a concrete island.

Existing Diebold Island

The Personas 90e can be fitted onto an existing Diebold 1074 island with no reworking of the island required.

New Island

The following illustrations shows the minimum island size.

Recommended specifications for the concrete to be used when constructing an island should conform to the maximum weight specifications (see page 2-10).

Caution It is very important that the ATM is mounted on a level surface.

Note 1: It is the customers' responsibility to supply and install power cables, junction box, conduit and connectors that comply with local regulations. The recommended length of cabling from the conduit box to the power supply is **914 mm** (36.0 in.). The conduit and box must not protrude above the surface of the island.

Note 2: It is the customers' responsibility to supply and install a suitable P.V.C pipe (a minimum diameter of **101 mm** (4.0 in.) is recommended) for routing of the communications, video, canopy lights and alarm cables. The pipe must be trimmed to size and must not protrude above the surface of the island.

Note 3: When fitting bollards, it is recommended the rear bollards are **102 mm** (4.0 in.) in diameter, fitted **229 mm** (9.0 in.) out from the side of the ATM and positioned in line with the rear of the ATM. It is also recommended the front bollards are **102 mm** (4.0 in.) in diameter, and positioned as near to the curb as possible without overhanging the edge.

Island Dimensions

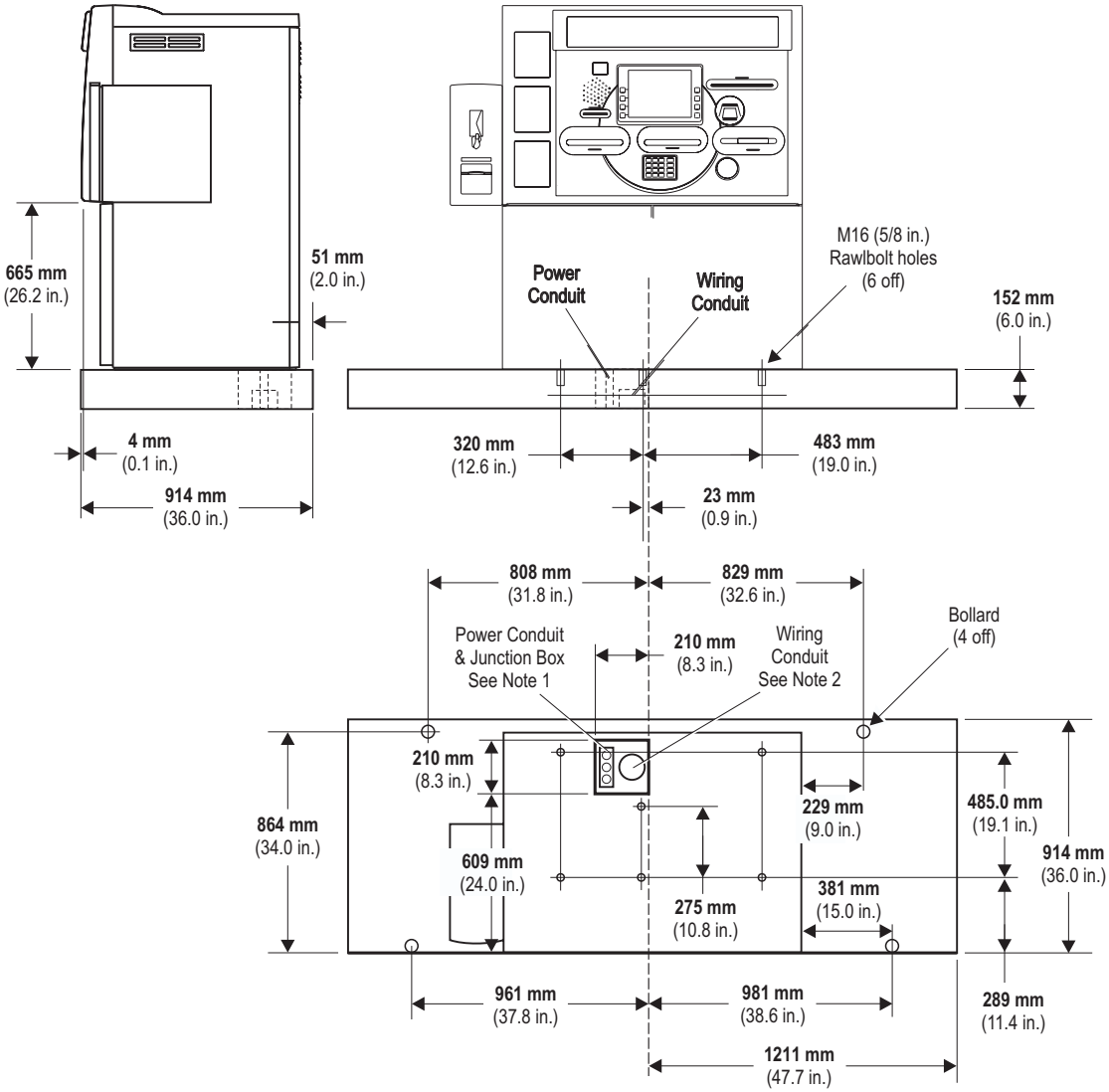

Installation and Service Clearances

Minimum Clearances

The following illustrations show both **minimum** and **recommended** areas required for installing, servicing and replenishing an ATM.

Note: The power and communication cables should be installed within the ATM prior to final siting.

This illustration shows the safe door in the service position.

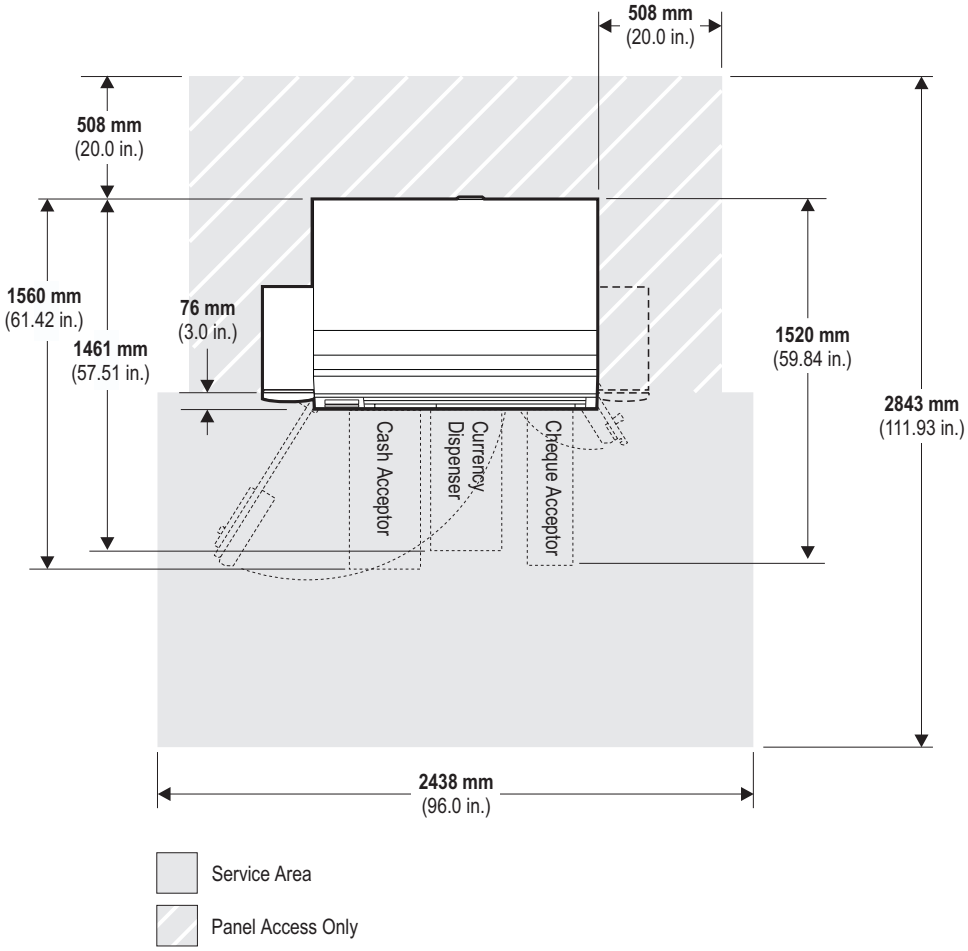

Recommended Clearances

This illustration shows the safe door in the service position.

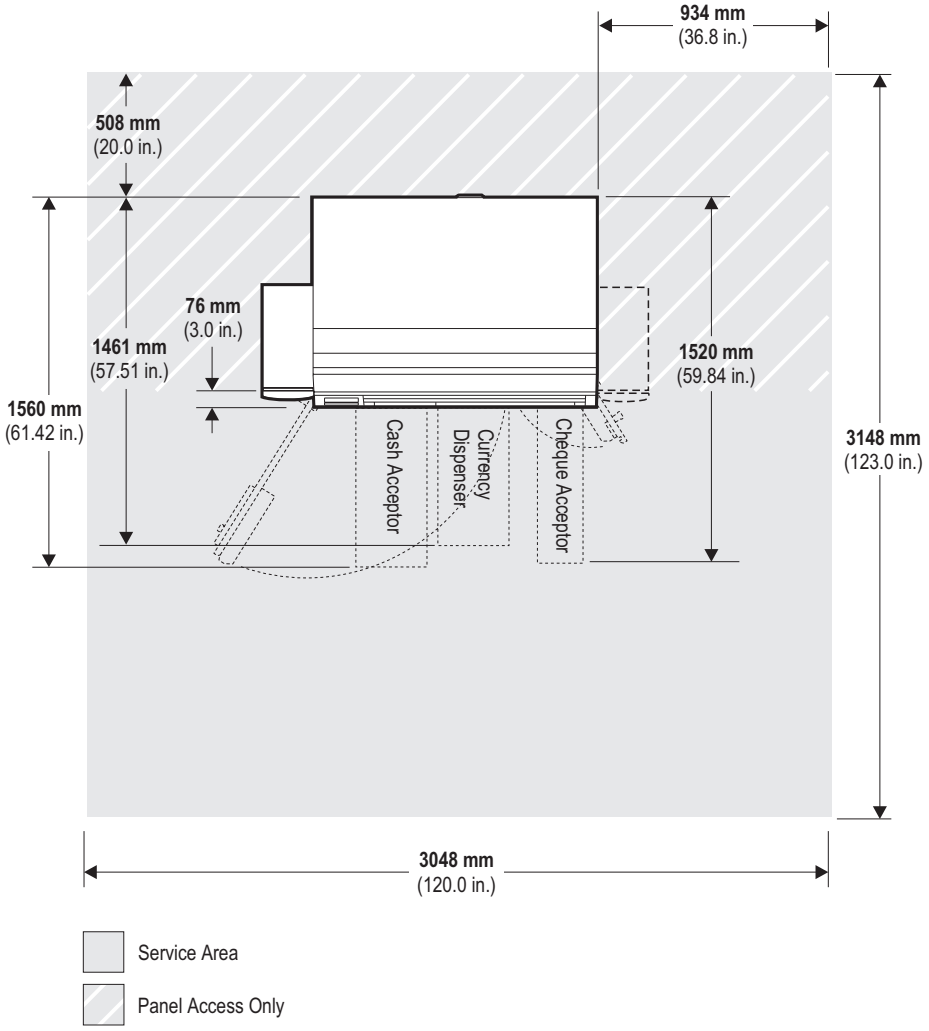

Ambient Lighting

If the ATM is fitted with a video camera it is strongly recommended that there is a minimum of 50 LUX lighting at floor level within the area illustrated below. This lighting conforms to:

- Australian Standard for Automatic Teller Machines (1990)
- Lighting for Automated Teller Machines as prepared by Illuminating Engineering Society of North America (1997).

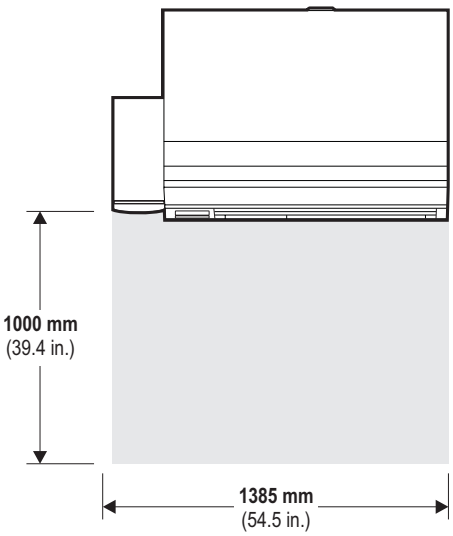

Security Bolts

It is recommended that the ATM is bolted to the island using 6 bolts.

Note: The securing bolts and anchors must be supplied by the owning organisation.

The recommended specification for bolts to secure the ATM to stone/concrete base is:

- M16 (5/8 in.) high tensile Rawlbolt - **16mm** (5/8 in.) diameter x **127mm** (5 in.) long
- Anchor point for M16 (5/8 in.) Rawlbolt, length suitable to clamp **76.2mm** (3 in.) of bolt.

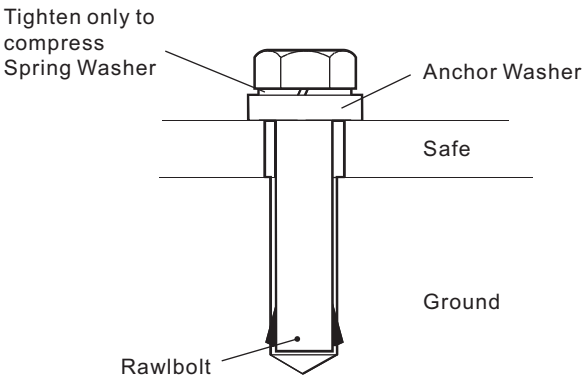

ATM Location

The ATM should not be located in a position where bright sunlight will fall directly on the ATM screen.

Floor Loading

The ATM must be installed on a solid, level floor capable of supporting the maximum weight. The weight of the ATM varies with configuration, however, only the maximum weight should be considered since additional options may be added after installation. The ATM can be stabilised with the use of the stabilising bolts supplied.

Note: Floor loading is calculated by dividing the maximum weight of the ATM by the surface area of the ATM base (the area in contact with the floor).

- Maximum weight: **1450 kg** (3197.3lb.)
- Floor loading: **1459.4 kg/m^2** (313.8 lb/ft^2).

Access for All

The ATM conforms to the Canadian Standards Association (CSA) Barrier Free Access and the Americans with Disabilities Act (ADA) as applicable to drive-up ATMS.

Heights to Main Facia Items

The following illustration shows the heights from the road surface to the centre of the main items, or exit slots located on the ATM facia. These figures are based on the ATM being mounted on a **152.4 mm** (6.0 in.) high island.

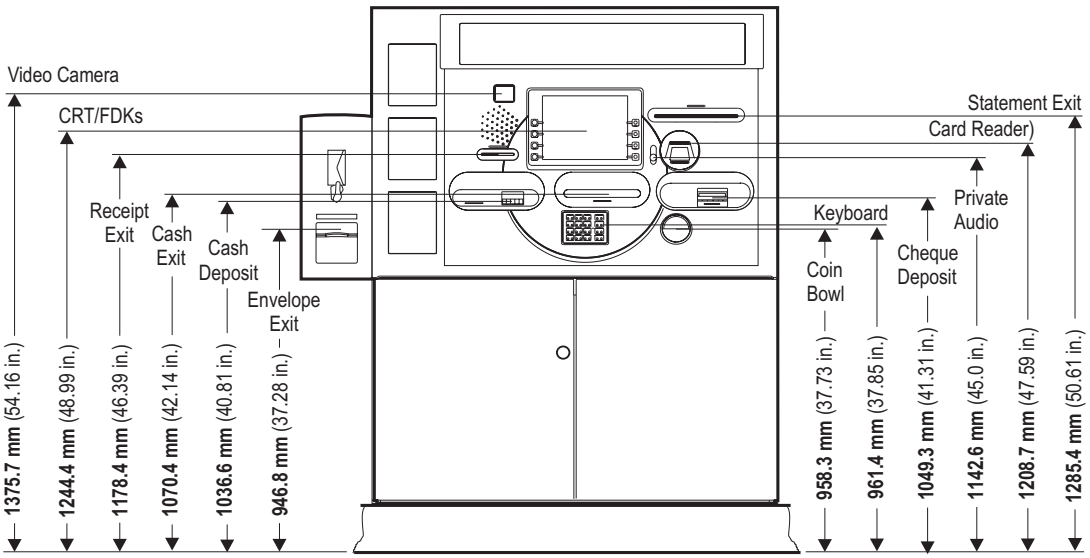

Chapter 3

Electrical Requirements

Power Quality Distribution and Grounding Requirements 3-1
AC Power Requirements 3-1
Input Voltage Setting 3-1
Power Cable 3-1
Grounding Requirements 3-2
Transient Power Loss 3-3
Electromagnetic Compatibility (EMC) and Safety 3-3
EMC Directives 3-3
Immunity Standards 3-3

Communications Requirements 3-4
High Order Communications Cables 3-4
High Order Communications Standard Cable (RS-232-C) 3-4
Remote Device Cables 3-5
RS-232-C Cable 3-5
Remote Status Indicator 3-7
Alarm Interface Cable 3-8
Remote Relay Cable 3-11

Power Quality Distribution and Grounding Requirements

Voltage transients, line noise, surges, sags, impulses, and spikes may be experienced routinely or sporadically. When such phenomena occur, the use of protective devices, as described in Appendix A and B, may be required to ensure proper operation of the equipment.

AC Power Requirements

The maximum current requirements at various input voltages are:

- 19A at 120V
- 12.6A at 220V.

The maximum inrush current requirements at various input voltages are:

- 50A peak at 136V
- 80A peak at 257V.

Note 1: The ATM must comply with local code requirements and be protected with a 30A circuit breaker.

Note 2: If you are considering upgrading your ATM to include the Cash Acceptor, you should be aware that in the event of a power failure, there is the potential for customers cash to be retained in this module. For this reason NCR do not recommend running an ATM with a Cash Acceptor without an Uninterruptible Power Supply (UPS).

Input Voltage Setting

The ATM can operate from the following input mains voltages:

- 90V to 136V at 50/60Hz
- 198V to 257V at 50/60Hz.

Power Cable

The ATM is a fixed wire product and is not supplied with a power cable. The following illustration indicates how the internal wiring of the ATM is connected to a 30A circuit via a terminal block connector.

Note: The cable used to connect to the ATM must have copper conductors.

Warning **This equipment must be earthed.**

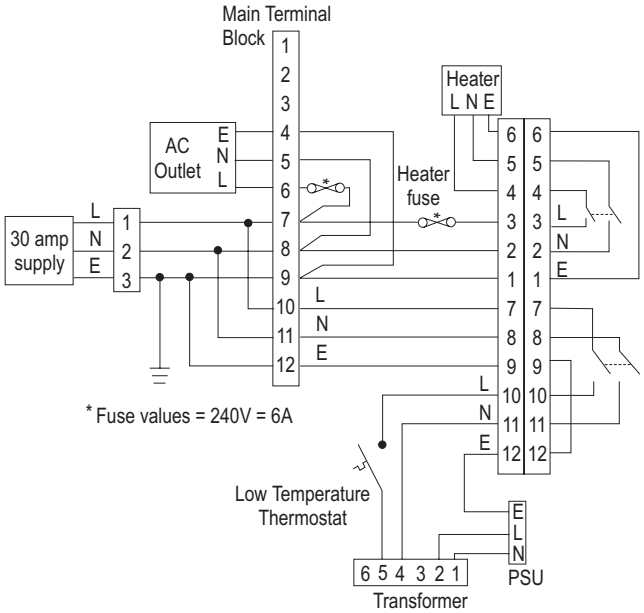

Note: Low Temperature Thermostat is closed at 10° and above

Grounding Requirements

The ATM operates from a single phase 3 wire supply; live, neutral and ground. The power requirements of this unit will normally permit it to operate within existing wiring configurations and from existing branch mains outlets with the following provisions:

1. If this supply is provided from a general purpose distribution panel, the other branch circuits from this panel must not be used to support heavy inductive loads such as air conditioners, elevators, microwave ovens, and so on. Nor may such equipment be operated on the same branch circuit as the ATM.

2. If using distribution panels, all branch circuit grounding conductors must be connected to an insulated terminal strip in the distribution panel. The grounding conductor from the distribution panel to the building ground point must be at least equal in size to the power conductor necessary to supply the NCR system.

Note: The building ground point can affect data integrity. For additional information refer to the ‘Data Line Transient Protection’ section of Appendix A.

Transient Power Loss

The voltage loss due to power interruptions must not be more than 50% of the nominal value for a maximum of one half cycle at a maximum rate of 1 every 10 seconds.

Electromagnetic Compatibility (EMC) and Safety

The ATM complies with the following standards and directives:

EMC Directives

- 89/336/EEC “EMC Directive”
- 92/31/EEC “Amending EMC Directive”
- 73/23/EEC “Low Voltage Directive”
- 93/68/EEC “CE Marking Directive”.

The Harmonised EMC Standards are as follows:

Radiated and Conducted:

- EN 55022 (1998) Class A
- FCC CFR 47 Part 15 Class A.

Conducted (220V - 240V units):

- EN61000-3-2 (latest revision) Mains Harmonics (Class A)
- EN61000-3-3 (latest revision) Mains Flicker.

Immunity Standards

- EN 55024 (1998) “ITE Immunity Standard”.

The Harmonised Safety Standard is as follows:

EN 60950 “Safety of IT Equipment”.

Communications Requirements

Voltage transients, line noise, surges, sags, impulses, and spikes may be experienced routinely or sporadically. When such phenomena occur, the use of protective devices, as described in Appendix A, may be required to ensure proper operation of the equipment.

It is the responsibility of the customer to assure that all installation preparations are complete and in compliance with NCR specifications and requirements and with all national, state or local telephone and telegraph regulations and laws.

High Order Communications Cables

The high order communications cable type depends upon the communications system to be used. Cables that may be required are:

- High order communications standard cable (RS-232-C)
- IBM local loop communications cable.

Note: Communications cables are not supplied with the ATM. If these cables are required, it is the customer's responsibility to have them installed. The specifications for these cables are supplied in the following sections. When producing cables allow for **2 metres** (6.5 feet) of cable within the ATM.

High Order Communications Standard Cable (RS-232-C)

The standard high order communications system supports most common bit and byte orientated disciplines (synchronous and asynchronous) with an RS-232-C interface.

The interconnecting cable to the remote modem should not exceed **15.24m** (50ft.) in length, and must conform to the specification and wiring given below:

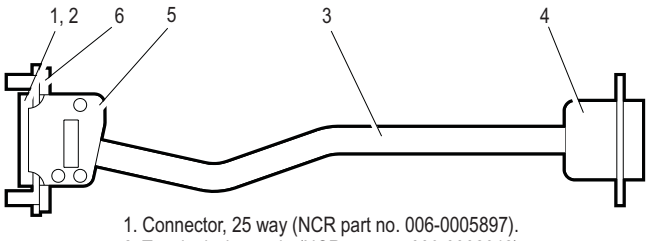

1. Connector, 25 way (NCR part no. 006-0005897).
2. Terminal wire, male (NCR part no. 009-0002642).
3. Cable, multiconductor (NCR part no. 007-8907033).
4. Connector (determined by remote device).
5. Shell hood (NCR part no. 006-1081980).
6. Screw retainer (NCR part no. 601-0101584).

Remote Device Cables

RS-232-C Cable

The ATM can have one RS-232-C outlet which can be configured to provide an interface for a device such as a remote camera.

For both options the cable is limited in length to **15.24m** (50ft.) and must conform to the following specification and wiring:

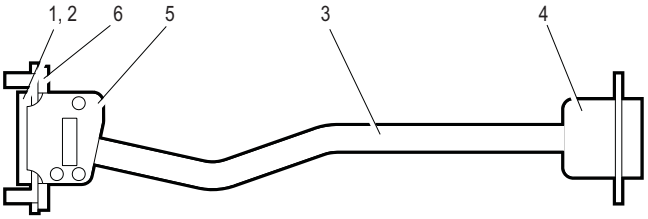

1. Connector, 25 way (NCR part no. 006-0005897).
2. Terminal wire, male (NCR part no. 009-0002642).
3. Cable, multiconductor (NCR part no. 007-8907033).
4. Connector (determined by remote device).
5. Shell Hood (NCR part no. 006-1081980).
6. Screw retainer (NCR part no. 601-0101584).

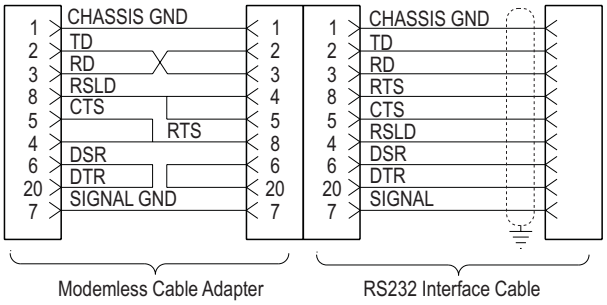

At a point **1800mm** (70.87 in.) from the connector end of the cable, remove a **20mm** (0.8 in.) section of the outer sleeve as shown.

Note: Take care not to cut through the cable shielding when removing the outer sleeve.

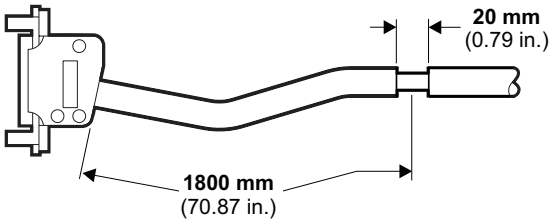

Remote Status Indicator

The remote status indicator feature is supplied as a complete assembly and consists of a status indicator unit, **76.2m** (250ft.) of cable and a connector.

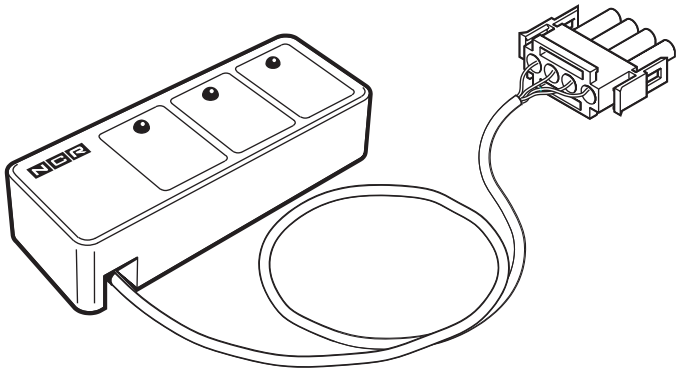

At a point **1800mm** (70.87 in.) from the connector end of the cable, remove a **20mm** (0.8 in.) section of the outer sleeve as shown.

Note: Take care not to cut through the cable shielding when removing the outer sleeve.

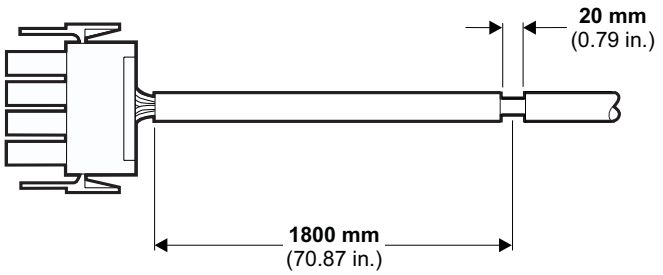

If you are required to shorten the cable, proceed as follows:

1 Remove the cover from the indicator.

2 Disconnect the four leads from the indicator, that is E1, E2, E3 and E4.

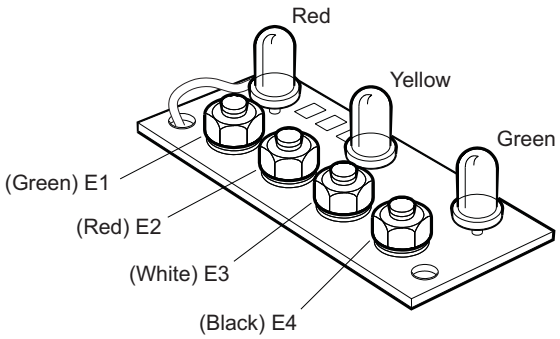

3 Cut the cable to the required length and strip the four wire ends.

4 Connect the wires to the correct terminals.

5 Replace the Remote Status Indicator cover.

Alarm Interface Cable

The ATM may optionally be configured to provide an alarm interface which enables the ATM to be connected to an external local alarm system. The interface may take the form of one of two options; a basic alarm system or an enhanced alarm system.

The external alarm system must provide to the ATM, through the alarm interface cable wiring, a non-interruptible, stabilized power supply with the following specifications:

- 12V ± 2V dc
- 200mA maximum
- Ripple, 5% maximum.

The interconnecting cable to the ATM is similar for both alarm interface options and must conform to the following specification and wiring:

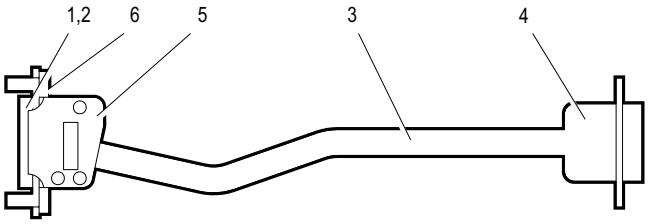

1. Connector, 25 Way (NCR part no. 006-0005896)
2. Terminal, wire, female (NCR part no. 009-0002640)
3. Cable, multiconductor (determined by the alarm installed).
4. Connector (determined by remote device).
5. Shell Hood (NCR part no. 006-1081980).
6. Screw retainer (NCR part no. 601-0101584).

At a point **1800mm** (70.87in.) from the connector end of the cable, remove a **20mm** (0.8 in.) section of the outer sleeve as shown.

Note: Take care not to cut through the cable shielding when removing the outer sleeve.

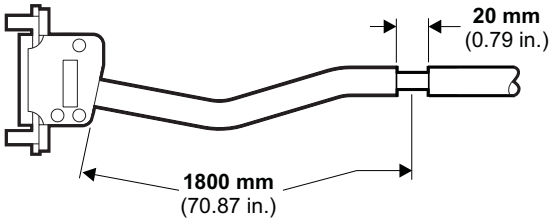

Basic alarm interface cable wiring:

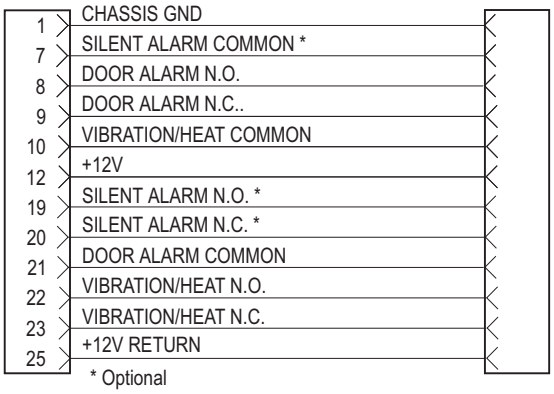

Enhanced alarm interface cable wiring:

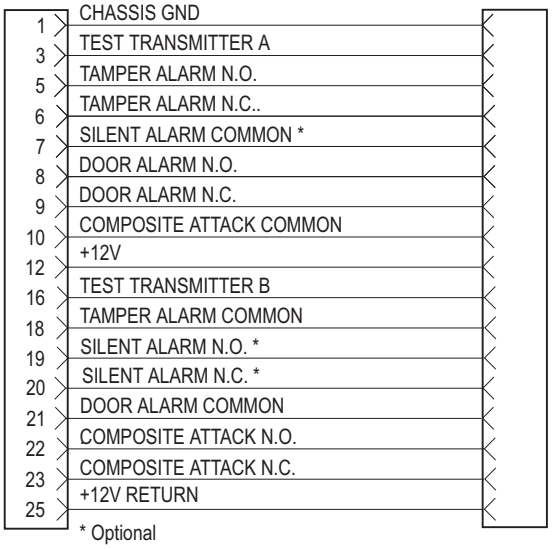

Remote Relay Cable

The remote relay provides a pair of open contacts, rated at 28 volts and up to 1 amp (AC or DC supplies), which can be closed to activate a remote device. The interconnecting cable to a remote device must conform to the following specification and wiring:

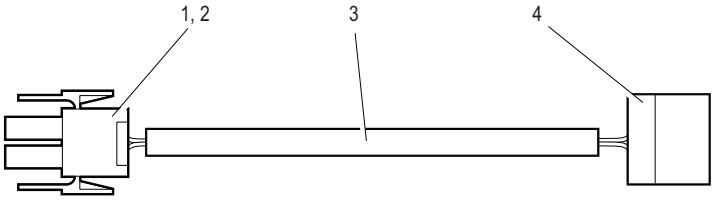

1. Connector, 2 way Mate-N-Lock (NCR part no. 007-9814285).
2. Terminal wire, male (NCR part no. 007-2009663).
3. Cable, multiconductor (NCR part no. 006-5800006).
4. Connector (determined by remote device).

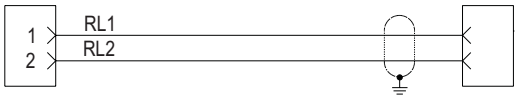

At a point **500mm** (19.7 in.) from the connector end of the cable, remove a **20mm** (0.8 in.) section of the outer sleeve as shown.

Note: Take care not to cut through the cable shielding when removing the outer sleeve.

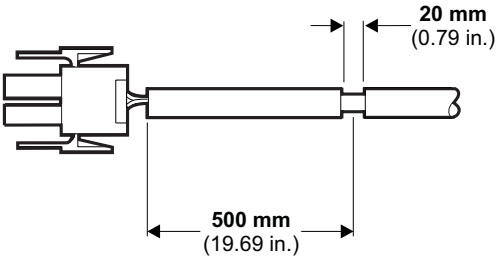

Chapter 4

Installation Site Environmental Requirements

Environmental Requirements 4-1
Temperature and Humidity 4-1
Normal Operating Range - Exterior of ATM 4-1
All Environments: 4-1
Barometric Pressure 4-1
Temperature Rise 4-1

Environmental Requirements

For the terminal to function correctly, the installation site should meet the following environmental requirements.

Temperature and Humidity

The terminal will operate over a range of temperature and humidity. However, continuous operation at or near the range limits or in a location where the temperature and humidity change beyond the specification, should be avoided. The temperature and humidity ranges are as follows:

Normal Operating Range - Exterior of ATM

- Temperature (still, calm conditions): **-35°C** to **50°C** (-31°F to 122°F)
- Temperature change rate: **10°C** (18°F) per hour
- Relative humidity: 10% to 100%
- Relative humidity change rate: 10% per hour
- Dew point temperature restriction: **26°C** (79°F) maximum.

All Environments:

Storage range (up to three months):

- Temperature: **-10°C** to **50°C** (14°F to 122°F)
- Temperature change rate: **15°C per hour** (27°F per hour)
- Relative humidity: 10% to 90%.

Transit range (up to one week):

- Temperature: **-40°C** to **60°C** (-40°F to 140°F)
- Temperature change rate: **20°C per hour** (36°F per hour)
- Relative humidity: 5% to 95%.

Barometric Pressure

Operating and transit limits: **105kPa** (15.2 lb. F per in.)

Equivalent altitude: up to a maximum of **3000 metres** (9750 feet).

Temperature Rise

The temperature rise for air passing through the terminal is **4°C** (7.2°F).

Chapter 5

Decals

Decal Specifications 5-1
Clear Windows 5-1
Card Reader Decal (Orientation) 5-2
Advert Light 5-2

Decals

Decal Specifications

This following illustrations provide the approximate locations and specifications for the decals which you may wish to fit to the front of your ATM.

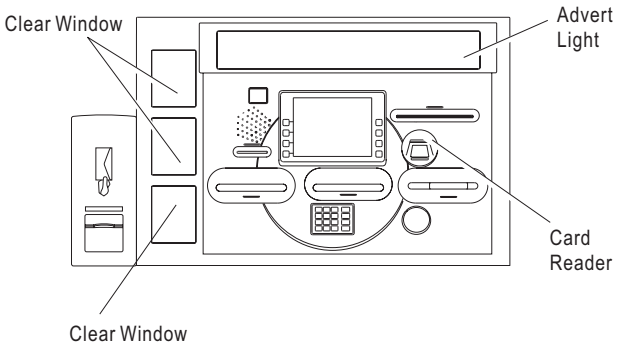

Clear Windows

The 3 Clear Window decals, which are typically used to provide the consumer with information on card acceptance, surcharging or general advertising should conform to the following dimensions:

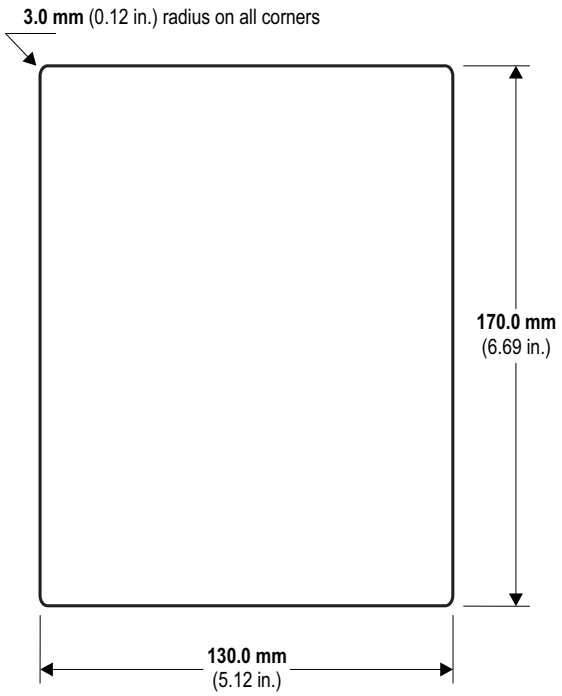

The insert should be a maximum of **0.8 mm** (0.031 in.) thick. NCR recommend that the insert be made from one of the following materials:

- Polycarbonate
- Polyester
- Paper.

Card Reader Decal (Orientation)

If the Motorised Card Reader Module window is to be customised to indicate card orientation. The card / decal to be inserted should be a maximum of
0.75 mm (0.029 in.) thick and conform to the following dimensions:

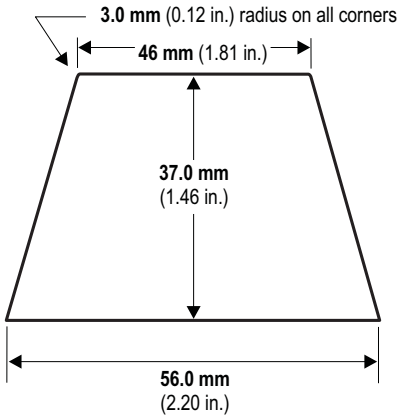

Advert Light

The advert light decal should be a maximum of **0.5 mm** (0.02 in.) thick and it is recommended that it is made from Transparent Polycarbonate with 3M 467 High Performance MP adhesive. The size of the decal should conform to the following dimensions:

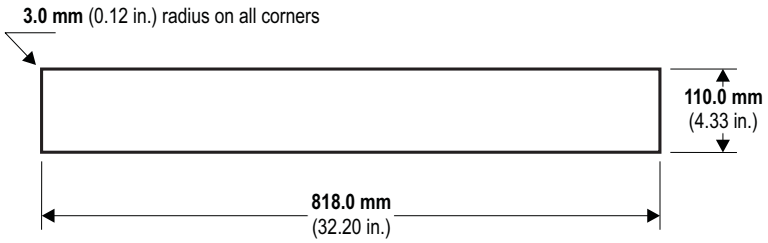

Appendix A

Transient Protection

AC Power Line Transient Protection A-1

Data Line Transient Protection A-3

AC Power Line Transient Protection

In the process of power distribution, transient electrical energy (including, but not limited to, lightning strikes, intermittent short circuits, and switching transients) can be introduced on to power lines. Such transient energy can be very damaging to electronic hardware and can also cause data corruption. Under these circumstances, NCR recommends the use of ac power transient suppressors and data (communication) line transient suppressors. Such protective devices are intended to guard against power and data line transients that can result in hardware damage and various system or program errors.

Improvement of any deficiencies in power quality is a customer responsibility. Malfunction and/or component failure as a result of power quality problems are/is not covered by NCR Maintenance Agreement, NCR accepts no liability for any such occurrence nor for its consequences.

When power transient suppression is required, the suppressors used should meet the following minimum requirements:

- Dissipate energy to match the appropriate application categories as defined by IEEE Standard 587. These categories are described in the table below:

Location Category	Comparable to IEC No 664 Category	Transient	
		Waveform	Amplitudes
A=Outlets > **10m** (30 ft) from Cat. B A= Outlets > **20m** (60 ft) from Cat. C	II	0.5 µ s Risetime, then 100 kHz Ringwave, each peak=60% of previous	6 kV 200A
B=Major feeders, short branch circuits, and load centres	III	Volts=1.3 x 5 µ s Current= 8 x 20 µ s and 0.5 µ s Rise = 100 kHz Ringwave	6kV 3kA 6kV 500A
C = Service Entrance and run to load centre	IV	Volts = 1.2 x 5 µ s Current = 8 x 20 µ s	10kV or more 10kA or more

- Be of the voltage limiting (clipping), or tracking filter type. The suppressor must not ‘clamp’ the voltage to zero, and must self-recover after passage of the transient. The suppressor may be of the hybrid type construction that makes use of various technologies in order to meet speed and dissipation requirements
- Exhibit a ‘short circuit’ mode upon its failure, thus providing a positive indication of its failure such as a blown fuse or tripped breaker
- Be listed by the accepted safety organization for the country involved (e.g. UL, CSA, VDE, ETL, etc.) and the installation must conform to local, state, and national electrical codes and regulations.

Data Line Transient Protection

The nature of the transient phenomenon may extend to the data communication lines connected to this equipment. It is the responsibility of the customer to install and connect a data line transient suppression system to correct or prevent any deficiencies. Such systems must meet the following minimum requirements:

- Be of the voltage limiting type and must self-recover after passage of the transient
- Exhibit a 'short circuit' mode upon its failure to insure a positive indication of its failure
- Insert less than 5 ohms resistance and minimal inductive and capacitive loading at the operating frequency, in each data line in order to avoid signal degradation
- Be installed in accordance with all applicable local, state, and national electrical codes and regulations.

Note: In certain countries, NCR is able to supply both power and data line transient suppressors as well as a comprehensive line of power conditioning equipment. For application data, contact your NCR Customer Services Division Representative.

Appendix B

Power Protection

NCR Power Protection and Cabling Products B-1
AC Power Line Transient Protection B-1
Data Line Transient Protection B-1
Uninterruptible Power Supplies B-2
Contact Information B-4

NCR Power Protection and Cabling Products

Power protection equipment suitable for use with NCR ATMs can be purchased from the NCR Power Protection and Cabling group. Some of these products are outlined below.

AC Power Line Transient Protection

The following products can be purchased from the NCR Power Protection and Cabling group to help provide protection from power line spikes and surges:

NCR Product ID	Description
4060-4030-0094	110V, 3 outlet, wall plug-in, 15 Amp suppressor, United States applications
4060-4050-0094	110V, 3 outlet, strip, 15 Amp suppressor with **1.8 metres** (6 feet) of power cable, United States applications
4060-4070-0094	110V, 7 outlet, strip, 15 Amp suppressor with **1.8 metres** (6 feet) of power cable, United States applications
4060-4310-7594	220V, 4 outlet, strip, United Kingdom plug fitted
4060-4311-7594	220V, 4 outlet, strip, German/European plug fitted
4060-4312-7594	220V, 4 outlet, strip, French plug fitted

These products have numerous features:

- unique five-stage hybrid circuitry
- protection from spikes and surges
- protection covers all modes - line to neutral, line to earth (ground) and neutral to earth (ground)
- integral RF/EMI damping capability
- thermal overload protection
- high capacity fusing
- indicator lights display operational readiness
- highly flame retardant plastic housing, conforming to UL94-5V.

Data Line Transient Protection

The following Data Line Transient Voltage Surge Suppressors can be purchased from the NCR Power Protection and Cabling group to help protect the communications port against harmful transient

surges from both external and internal sources not eliminated by Uninterruptible Power Supplies or other AC protection:

NCR Product ID	Description
4060-K018-V000	25 pin, CMP, snaps in to United States surge suppressors
4060-K019-V000	25 pin, CFP, snaps in to United States surge suppressors
4060-K021-V000	25 pin, CMP, stand-alone, all applications
4060-K022-V000	25 pin, CFP, stand-alone, all applications

Note: The first two products are designed to snap-in to the interface port on NCR Series 4000 Transient Voltage Surge Suppressors in the United States. The second two products are designed to be stand-alone for use in Europe.

Uninterruptible Power Supplies

Uninterruptible Power Supplies (UPS) can be purchased from the NCR Power Protection and Cabling group to help protect information and equipment by providing power conditioning and battery back-up.

NCR Product ID	Description
4084-1000-7194	1000 VA on-line UPS with rack/tower configuration, 120VAC 50/60 Hz
4084-1000-7494	1000 VA on-line UPS with rack/tower configuration, 230VAC 50/60 Hz

These products offer:

- on-line topology
- 10 minute battery backup at full load
- true sine wave output
- 100% clean, conditioned power to connected equipment
- extended battery cabinets available for extended run times
- on-board SNMP optional on all models
- standard LAN/serial (RS-232-C) network interface
- standard rack-mountable unit design
- also available in 1500 VA, 2000 VA and 3000 VA sizes.

NCR Product ID	Description
4071-1020-7194	1000 VA Enhanced line-interactive UPS, 120VAC 60 Hz
4071-1021-7194	1000 VA Enhanced line-interactive UPS, 120VAC 60 Hz, Rack-mountable
4071-1020-7494	1000 V A Enhanced line-interactive UPS, 230 VAC, 50/60 Hz
4071-1021-7494	1000 V A Enhanced line-interactive UPS, 230 VAC, 50/60 Hz, Rack-mountable

These products offer:

- line-interactive topology
- 8 minute battery backup at full load
- true sine wave output
- input voltage selectable to 110/127 VAC or 220/240 VAC
- advanced battery management prolongs battery life and ensures quick availability after discharge
- advanced battery management for early failure detection and advanced user warning
- internal transformer provides voltage buck/boost
- standard LAN/serial (RS-232-C) network interface
- rack-mountable configuration
- available in 600 VA, 1500 VA, 2000 VA, 2200 VA, 2400 VA and 3000 VA sizes.

NCR Product ID	Description
4070-1000-7194	1000 VA Line-interactive UPS, 120AC, 60 Hz
4070-1000-7494	1000 VA Line-interactive UPS, 230VAC, 50/60 Hz

These products offer:

- line-interactive topology
- 7 minute battery backup at full load
- modified sine wave output
- input voltage selectable at 110/127 VAC or 220/240 VAC

- advanced battery management prolongs battery life and ensures quick availability after discharge
- advanced battery management for early failure detection and advanced user warning
- internal transformer provides voltage buck/boost
- standard LAN/serial (RS-232-C) network interface
- hot-swappable batteries
- available in 450 VA, 700 VA, 1500 VA sizes.

Contact Information

For more information from NCR's Power Protection and Cabling Group on the power protection, data line transient suppressors and uninterruptible power supply products available, warranty or configuration assistance, call the appropriate number below:

	Telephone
Worldwide (excl. USA)	(44) 1932 57 3435 or + 1 919 460 9489
USA only	1 800 257 0458

	Facsimile
Worldwide	USA +1 919 460 9558

Index

A

AC Power Line Transient Protection A-1, B-1
Ambient Lighting 2-7

C

Cables
- Alarm Interface Cable 3-8
- High Order Communications Cables 3-4
- High Order Communications Standard Cable (RS-232-C) 3-4
- Remote Device Cables 3-5
- Remote Devices (RS-232-C) 3-5
- Remote Relay Cable 3-11
- Remote Status Indicator 3-7

Communications Requirements 3-4

D

Data Line Transient Protection A-3, B-1
Decal Specifications 5-1

E

EMC 3-3
Environmental Requirements 4-1
- Barometric Pressure 4-1
- Temperature and Humidity 4-1
- Temperature Rise 4-1

F

Floor Loading 2-8

G

Grounding Requirements 3-2

H

Humidity 4-1

I

Installation Accessories 1-2
Island Dimensions 2-3

P

Packaging Dimensions 2-1
Planning Check List 1-1
Power Line Transient Protection A-1, B-1
Power Protection and Cabling Products B-1
- Contact Information B-4

Power Quality Distribution and Grounding Requirements
- AC Power Requirements 3-1
- EMC 3-3
- Input Voltage Setting 3-1
- Power Cable 3-1
- Transient Power Loss 3-3

Product
Class Type xiv

R

Remote Status Indicator 3-7

S

Security Bolts 2-8

T

Temperature and Humidity 4-1
Terminal Dimensions 2-2

U

Uninterruptible Power Supplies B-2

W

Weight 2-8

Cut

User Feedback Form

Title: NCR Personas P90e ATM Site Preparation

Number: B006-6334-C000 **Date:** 1204

NCR welcomes your feedback on this publication. Your comments can be of great value in helping us improve our information products.

You may send your comments to us electronically. See over for details.

Circle the numbers below that best represent your opinion of this publication.

Ease of use	5	4	3	2	1	0
Accuracy	5	4	3	2	1	0
Clarity	5	4	3	2	1	0
Completeness	5	4	3	2	1	0
Organization	5	4	3	2	1	0
Appearance	5	4	3	2	1	0
Examples	5	4	3	2	1	0
Illustrations	5	4	3	2	1	0
Job performance	5	4	3	2	1	0
Question resolution	5	4	3	2	1	0
Overall satisfaction	5	4	3	2	1	0

5 = Excellent
4 = Good
3 = Adequate
2 = Fair
1 = Poor

0 = Not applicable

Indicate the ways you feel we could improve this publication.

- ❑ Improve the table of contents
- ❑ Improve the overview / introduction
- ❑ Improve the organization
- ❑ Improve the index
- ❑ Make it less technical
- ❑ Make it more concise / brief
- ❑ Add more / better quick reference aids
- ❑ Add more examples
- ❑ Add more illustrations
- ❑ Add more step-by-step procedures
- ❑ Add more troubleshooting information
- ❑ Add more detail

Write any additional comments you may have below and on additional sheets, if necessary. Include page numbers where applicable.

Use the following addresses to send your comments to us electronically:

e-mail - userfeedback@exchange.scotland.ncr.com

Cut

Fold

If we may contact you concerning your comments, please fill in the information below:

Name:

Organization:

Company:

Address:

Phone: Fax:

Thank you for your evaluation of this publication. Fold the form where indicated, tape (please do not staple), and drop in the mail.

F 8763-0695

Fold

NCR

Affix Postage Stamp Here

NCR Financial Solutions Group Ltd.
Information Solutions Feedback
Kingsway West
Dundee
Scotland
DD2 3XX